VG6S.3

VG™ by VERSA-GARD®

Single-Sided
Full-Service Protector

FINISH:

- ☐ Brushed Stainless Steel
- ☐ Clear Anodized Aluminum
- ☐ Powder Coat:
  - ☐ Black ☐ Silver
  - RAL # _____

GLASS (Clear Tempered):

- ☐ 1/4" Clr Front - Std
- ☐ 3/8" Clr Front
- ☐ 1/2" Clr Front
- ☐ Frosted
- ☐ Anti - Reflective
- ☐ Starfire®
- ☐ 3/8' Top - Std
- ☐ 1/2" Top

OPTIONS(*):

- ☐ End Panel - LT
- ☐ End Panel - RT
- ☐ Light Fixture
- ☐ Warmer
- ☐ Shelf Kit

(*) Not all options available on all models
Contact factory for specific information
For Mounting Options see Mounting Hardware Guide

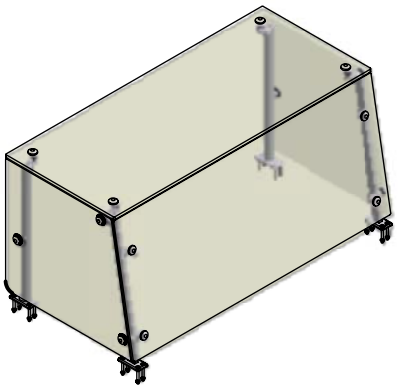

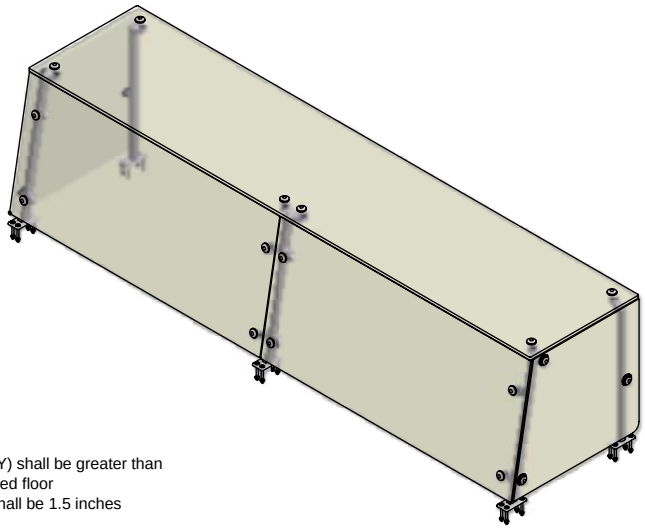

NSF/ANSI 2 Applicable Codes:

5.35.12 **Food Shields for use on cafeteria counters**

5.35.12.1 The sum of a shield's protected horizontal plane (X) and its protected vertical plane (Y) shall be greater than or equal to 32 inches. When (X) = 0, (Y) shall be a minimum of 60 inches from finished floor

5.35.12.2 Maximum distance from the bottom edge of the front vertical glass and counter top shall be 1.5 inches

5.35.12.3 Maximum distance between the vertical glass and horizontal glass is 3/4 inch

5.35.12.4 Minimum horizontal distance between the front inside edge of displayed food and the bottom leading edge of the shield s 1.5 inches

5.35.6 A vertical barrier (end shield) shall be provided at each end of a foodshield. The vertical barrier shall be a minimum of 18 inches deep (front to back) beginning at the bottom leading edge of the foodshield. The minimum height of the vertical barrier shall be equal to the overall height of the foodshield. The maximum distance from the bottom edge of the vertical barrier and counter top shall be 1.5 inches.

5.35.6.1 A foodshield intended to be installed a maximum of 3" (76mm) from a building wall perpendicular to the foodshield is exempt from the requirements of 5.35.6 provided that the height of the building wall is not lower than the overall height of the foodshield.

(2) End Panels per unit unless otherwise specified. End panels are 1/4" clear tempered glass unless otherwise specified.

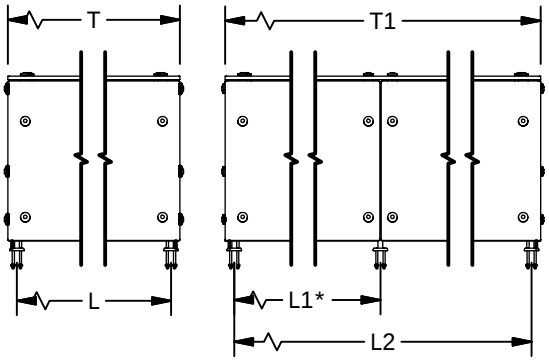

-Centerline Dimensions -
L / L1 - 48" Max (1/4" Glass)
- 60" Max (3/8" Glass)
- 66" Max (1/2" Glass)

T - 68" Max
T1 - 96" Max in Single Section

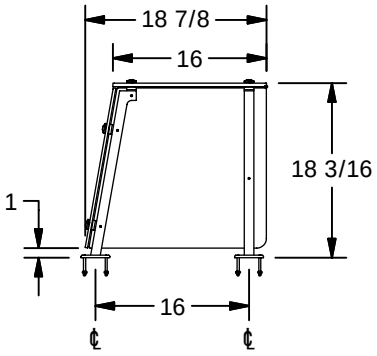

(* - Middle support is centered unless L1 dimension is specified)

Versa-Gard,LLC - 1094 Parkway Industrial Park Drive, Buford, GA 30518

VERSA-GARD® Copyright 2010